THIS DWG. IS SOLE PROPERTYOF NEOMETRIX ENGINEERING PVT. LTD.
UNAUTHORISED USE OF THIS DWG. OR MAKING PRODUCT AS PER THIS DWG.
WITHOUT OUR PERMISSION OR ANY OTHER MISUSE IS NOT PERMITTED.

Color	Description
	1/2 Inch Tube
	1/4 Inch Tube
	Flexible Hose

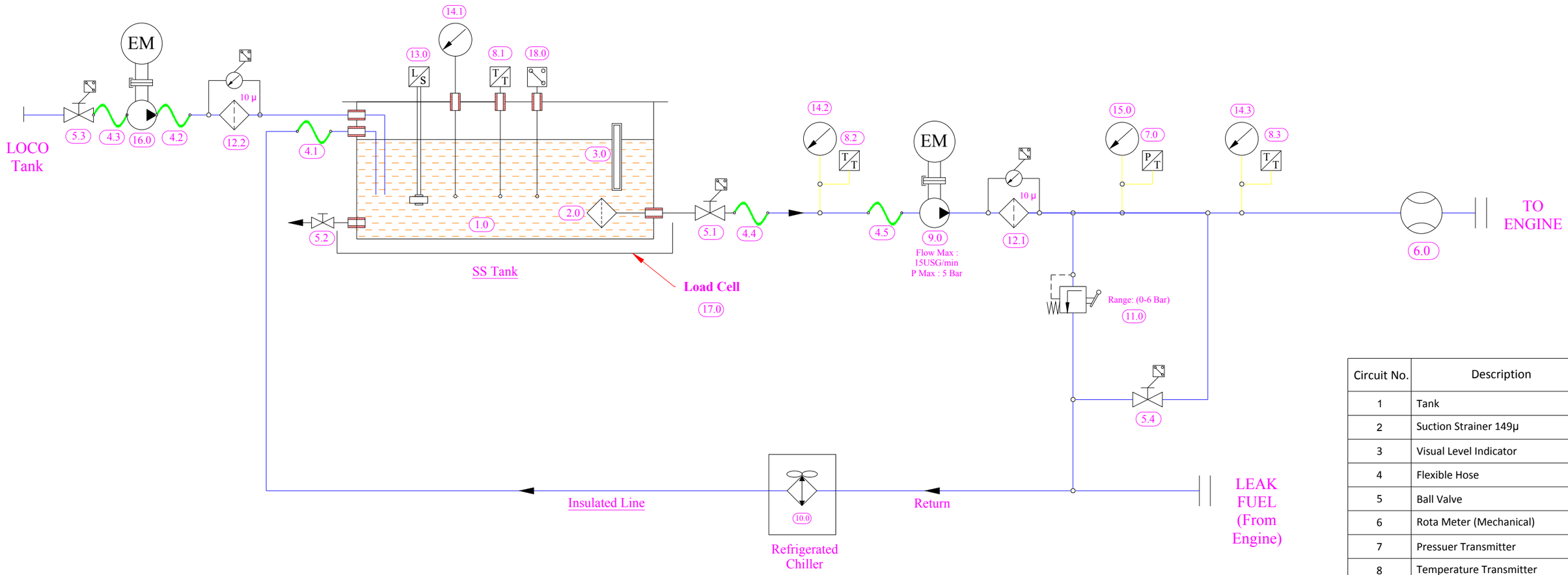

Circuit No.	Description
1	Tank
2	Suction Strainer 149µ
3	Visual Level Indicator
4	Flexible Hose
5	Ball Valve
6	Rota Meter (Mechanical)
7	Pressuer Transmitter
8	Temperature Transmitter
9	Main Fuel Pump
10	REFRIGERATED CHILLER
11	HAND OPERATED RELIEF VALVE
12	FILTER 10µ
13	Level Switch
14	Temperature Gauge
15	Pressure Gauge
16	Fuel Transfer Pump
17	Load Cell System
18	Temperature Switch

NEOMETRIX
www.neometrixgroup.com
NEOMETRIX ENGINEERING PVT LTD
E-148, Sector-63 , Noida, UP-201301
Tel. No. - 0120-4500800
Fax No. - 0120-4500888
Email - contact@neometrixgroup.com

MAIN TITLE	FUEL CONSUMPTION MEASUREMENT SYSTEM
SUB-TITLE	FUEL CIRCUIT
CODE	A1738
CUSTOMER	-----
END USER	----
TENDER No.	- - -

Q.A No.
CROSS REF.DOC.
CUSTOMER DWG./REF. No.
NOTES:

PROJECTION				Size	Scale	Sheet No.	Of	NEO. DWG. NO.	REV
	DRAWN BY & DATE	S.H	17/08/2017	A4	NTS	01	01	T-PP-A1738-HDWG-CIRCUIT	00
	CHECKED BY & DATE	S.P.S	17/08/2017						
	APPROVED BY & DATE	S.P.S	17/08/2017						