THIS DWG. IS SOLE PROPERTYOF **NEOMETRIX ENGINEERING PVT. LTD.**
UNAUTHORISED USE OF THIS DWG. OR MAKING PRODUCT AS PER THIS DWG.
WITHOUT OUR PERMISSION OR ANY OTHER MISUSE IS NOT PERMITTED.

Colour	Tube Size
	1/4"
	1/2"

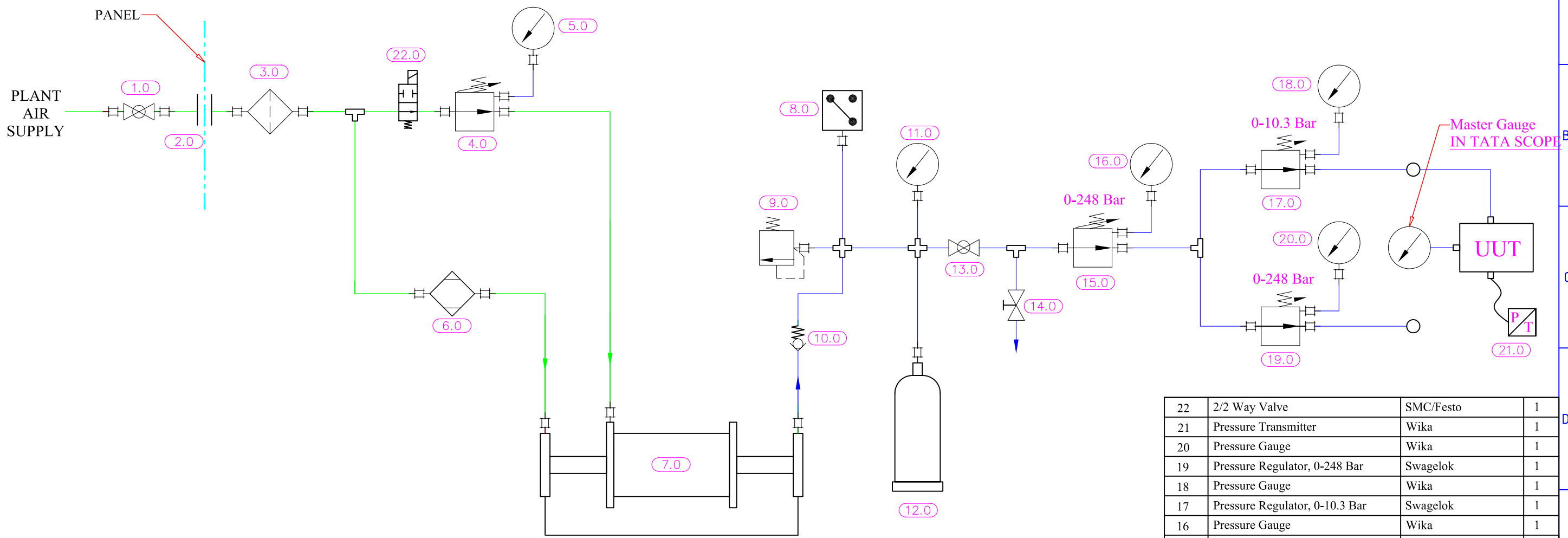

S. No.	Description	Make/Model	Qty.
22	2/2 Way Valve	SMC/Festo	1
21	Pressure Transmitter	Wika	1
20	Pressure Gauge	Wika	1
19	Pressure Regulator, 0-248 Bar	Swagelok	1
18	Pressure Gauge	Wika	1
17	Pressure Regulator, 0-10.3 Bar	Swagelok	1
16	Pressure Gauge	Wika	1
15	Pressure Regulator, 0-248 Bar	Swagelok	1
14	Vent Valve	Swagelok	1
13	Ball Valve	Swagelok	1
12	Cylinder, 15 Liter @300 Bar	EKC	1
11	Pressure Gauge	Wika	1
10	NRV	Swagelok	1
9	Relief Valve	Haskel	1
8	Pressure Switch	Wika	1
7	Air Booster	Haskel	1
6	Air Dryer	Trident	1
5	Pressure Gauge	Wika	1
4	Pressure Regulator	Festo	1
3	Filter	Festo	1
2	Bulkhead Union	JJH	1
1	On/Off Valve	Festo	1

NEOMETRIX
www.neometrixtechnology.com
NEOMETRIX ENGINEERING PRIVATE LIMITED
D-115, SECTOR-63, NOIDA-201301 (U.P.).
Tel. Phone No.- 0120-4264500-504
Fax No.- 0120-4264505
E-Mail: Contact@neometrix.in

MAIN TITLE	CNG REGULATOR TEST BENCH
SUB - TITLE	PNEUMATIC CIRCUIT DIAGRAM
CODE	HA00032
CUSTOMER	TML
END USER	TML
APPLICATION	

O.A No.
CROSS REF. DOC. -
CUSTOMER DWG. / REF. No.
-
NOTES:

PROJECTION				SIZE	SCALE	SHEET No.	SHEET OF	NEOMETRIX DWG. NO.	Rev.
	DRAWN BY & DATE	SK	11/06/2008	A4	NTS	01	01	T-PDWG-HA00032	00
	CHECKED BY & DATE	GG	11/06/2008						
	APPROVED BY & DATE	SPS	11/06/2008						